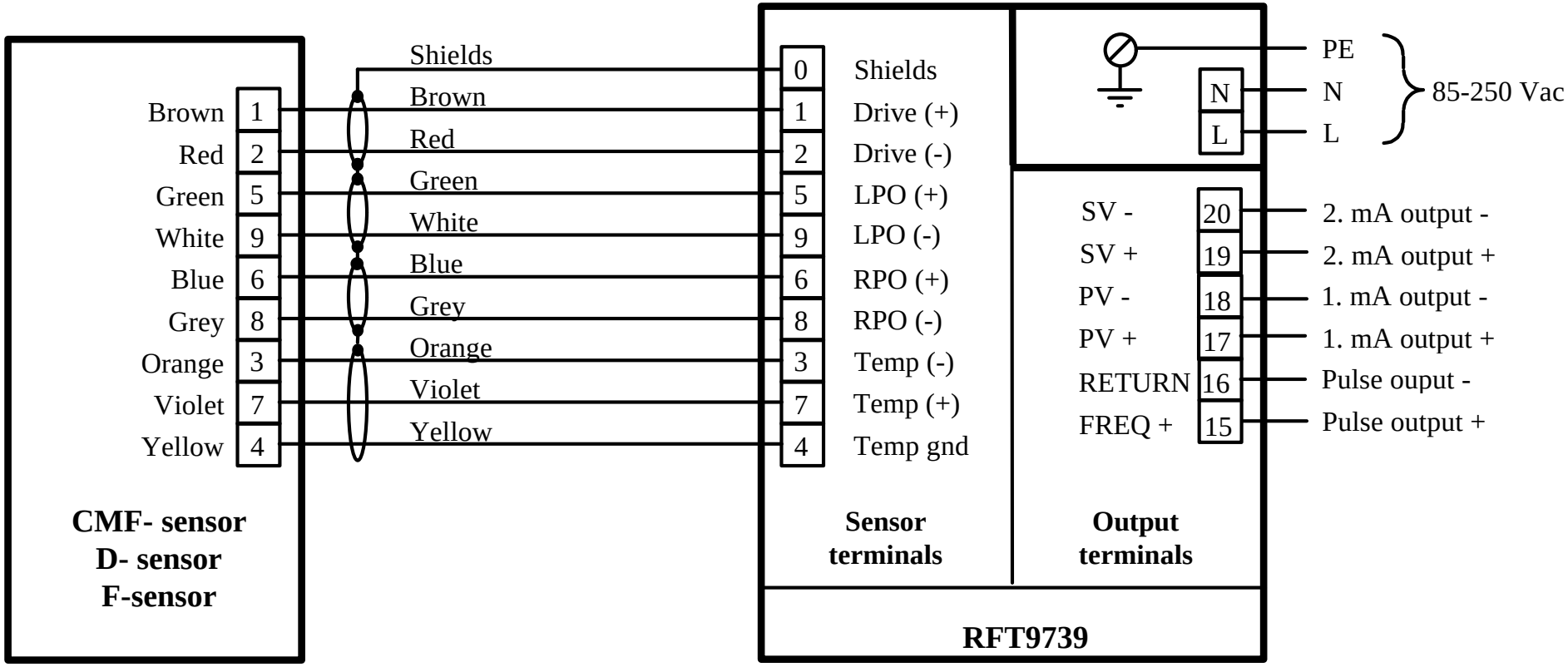RFT9739D transmitter and F-series sensor